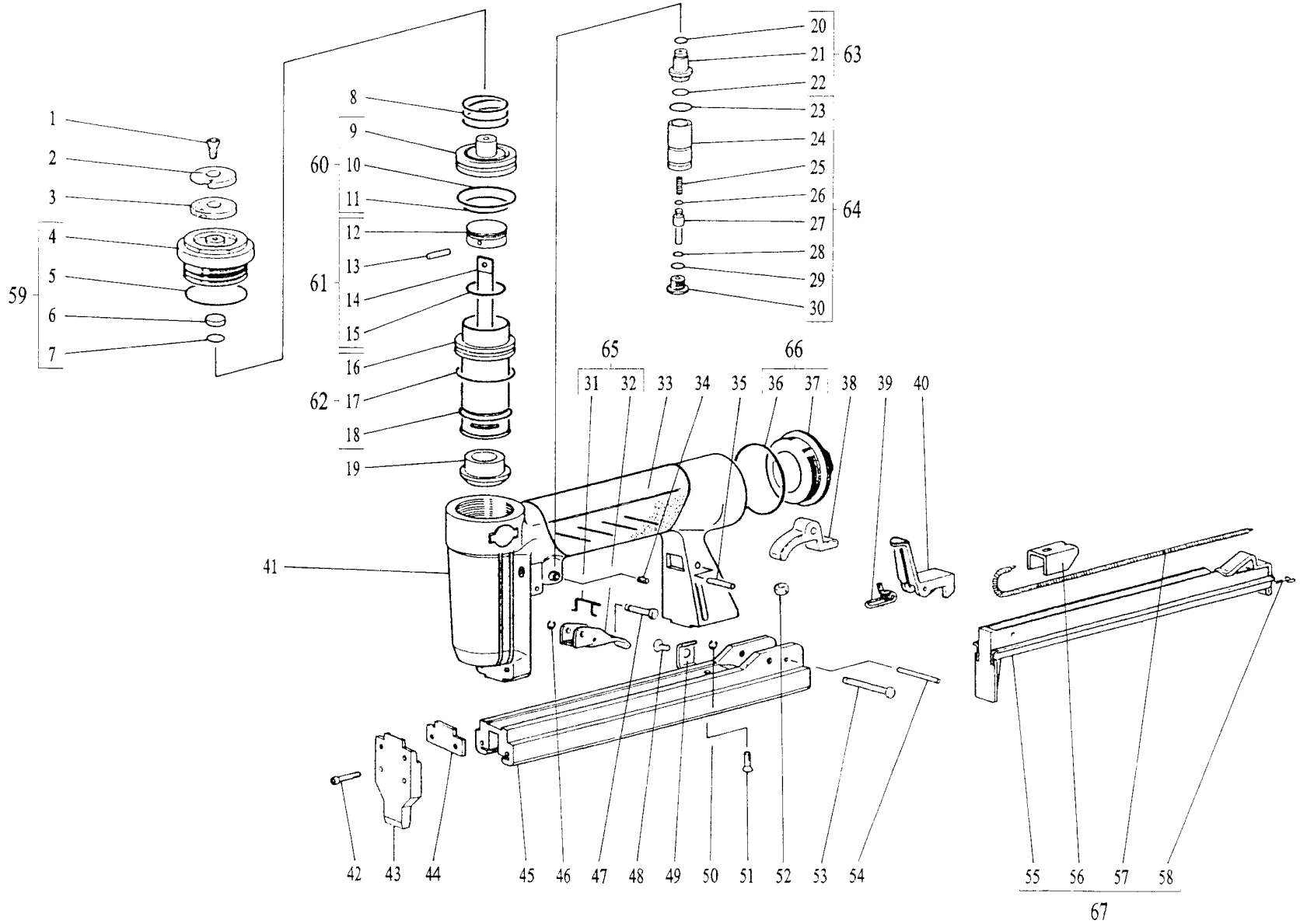
1
2
3
4
5
6
7
59
8
9
10
11
60
12
13
14
15
61
16
17
18
19
62
20
21
22
23
24
25
26
27
28
29
30
63
64
65
66
31
32
33
34
35
36
37
38
39
40
41
42
43
44
45
46
47
48
49
50
51
52
53
54
55
56
57
58
67

RIF.	COD.		
1	B000028A04	43	C610540A03
2	C416100A01	44	C416500A01
3	C416103A02	45	C416722A01
4	D416123A01	46	B000021C01
5	B000020A36	47	C216424A01
6	C216160A01	48	B000028A04
7	B000020A19	49	C416990A01
8	C016200A01	50	B000021C01
9	D416202A02	51	B000028A06
10	B000020A35	52	B000023B02
11	B000020A31	53	C416763A01
12	C416220A01	54	B000026A05
13	B000025A06	55	D416984A62
14	C610225A03	56	C016860A01
15	B000020A29	57	C216842A01
16	D416241A02	58	C225884A01
17	B000020A35	59	D416123A01
18	B000020A22	60	D416202A02
19	C016244A01	61	D610226A03
20	B000020A17	62	D416241A02
21	D416302A01	63	D416302A01
22	B000020A01	64	D416361A01
23	B000020A03	65	D416440A01
24	D416361A01	66	D216283A01
25	C216340A01	67	D416984A62
26	B000020A14		
27	D416345A01		
28	B000020A14		
29	B000020A18		
30	D416322A01		
31	C016400A01		
32	D416440A01		
33	C425262A01		
34	B000027B03		
35	B000026A08		
36	B000020A36		
37	D216283A01		
38	C416764A01		
39	C016761A01		
40	C416760A01		
41	C416261A02		
42	B000028B05		

	DATI TECNICI	POTENZA ACUSTICA	VIBRAZIONI PRODOTTE
Codice **A710000A09**	Peso: **820 gr.**	DIRETTIVA 89/392 CEE	DIRETTIVA 89/392 CEE
Modello **M10**	Dimensioni: **44-155-222 mm.**	prEN 12549 (1999)	ISO/FDIS 8662-11 (1999)
Tipo Punto **80**	Consumo aria: **0,24 Nl/colpo (6 bar)**	UNI EN ISO 3744 (1997)	ah.w.3s= **inferiore a 2,5 (m/s²)**
Lungh. min. **6 mm.**	Pressione min.: **4,0 bar**	LwA= **80,3 (dB)**	
Lungh. max. **16 mm.**	Pressione max.: **7,0 bar**	LpA 60S 1M= **78,9 (dB)**	

	TECHNISCHE DATEN	SCHALLEISTUNG	GERAETEBEZOGENER VIBRATIONSWERT
Kode **A710000A09**	Gewicht: **820 gr.**	EWG RICHTLINIE 89/392	EWG RICHTLINIE 89/392
Modell **M10**	Abmessungen: **44-155-222 mm.**	prEN 12549 (1999)	ISO/FDIS 8662-11 (1999)
Klammer Typ **80**	Luftverbrauch: **0,24 Nl/pro Schlag (6 bar)**	UNI EN ISO 3744 (1997)	ah.w.3s= **unter 2,5 (m/s²)**
Min. Länge **6 mm.**	Min.Betriebsdruck: **4,0 bar**	LwA= **80,3 (dB)**	
Max. Länge **16 mm.**	Max.Betriebsdruck: **7,0 bar**	LpA 60S 1M= **78,9 (dB)**	

	TECHNICAL FEATURES	NOISE POWER	TOOL RELATED VIBRATION VALUE
Code **A710000A09**	Weight: **820 gr.**	EEC DIRECTIVE 89/392	EEC DIRECTIVE 89/392
Model **M10**	Dimensions: **44-155-222 mm.**	prEN 12549 (1999)	ISO/FDIS 8662-11 (1999)
Staple type **80**	Air consumption: **0,24 Nl/shot (6 bar)**	UNI EN ISO 3744 (1997)	ah.w.3s= **below 2,5 (m/s²)**
Min. length **6 mm.**	Min.working pressure: **4,0 bar**	LwA= **80,3 (dB)**	
Max. length **16 mm.**	Max.working pressure: **7,0 bar**	LpA 60S 1M= **78,9 (dB)**	

	DONNEES TECHNIQUES	PUISSANCE ACOUSTIQUE	VALEUR DES VIBRATIONS PAR LA MACHINE
Code **A710000A09**	Poids: **820 gr.**	DIRECTIVE CEE 89/392	DIRECTIVE CEE 89/392
Modèle **M10**	Dimensions: **44-155-222 mm.**	prEN 12549 (1999)	ISO/FDIS 8662-11 (1999)
Agrafe type **80**	Consommation d'air: **0,24 Nl/coup (6 bar)**	UNI EN ISO 3744 (1997)	ah.w.3s= **inférieur á 2,5 (m/s²)**
Longueur min. **6 mm.**	Pression de fonction min.: **4,0 bar**	LwA= **80,3 (dB)**	
Longueur max. **16 mm.**	Pression de fonction max.: **7,0 bar**	LpA 60S 1M= **78,9 (dB)**	

	DATOS TECNICOS	POTENCIA ACUSTICA	VIBRACION PRODUCIDA
Código **A710000A09**	Peso: **820 gr.**	NORMATIVA 89/392 CEE	NORMATIVA 89/392 CEE
Modelo **M10**	Dimensiones: **44-155-222 mm.**	prEN 12549 (1999)	ISO/FDIS 8662-11 (1999)
Grapa tipo **80**	Consumo de aire: **0,24 Nl/disparo (6 bar)**	UNI EN ISO 3744 (1997)	ah.w.3s= **inferior a 2,5 (m/s²)**
Largueza min. **6 mm.**	Presion min.: **4,0 bar**	LwA= **80,3 (dB)**	
Largueza max. **16 mm.**	Presion max.: **7,0 bar**	LpA 60S 1M= **78,9 (dB)**	

	CARACTERISTICAS TECNICAS	POTENCIA ACUSTICA	NIVEL DE VIBRAÇAO DO PRODUTO
Codigo **A710000A09**	Peso: **820 gr.**	DIRECTIVA 89/392 CEE	DIRECTIVA 89/392 CEE
Modelo **M10**	Dimensões: **44-155-222 mm.**	prEN 12549 (1999)	ISO/FDIS 8662-11 (1999)
Tipo de agrafe **80**	Consumo de ar: **0,24 Nl/disparo (6 bar)**	UNI EN ISO 3744 (1997)	ah.w.3s= **inferior a 2,5 (m/s²)**
Largura min. **6 mm.**	Pressão min.: **4,0 bar**	LwA= **80,3 (dB)**	
Largura max. **16 mm.**	Pressão max.: **7,0 bar**	LpA 60S 1M= **78,9 (dB)**	